The University Of Sheffield.

Improving the Fundamental Understanding of Rough Surface Contacts with Third-Body Layers Present.

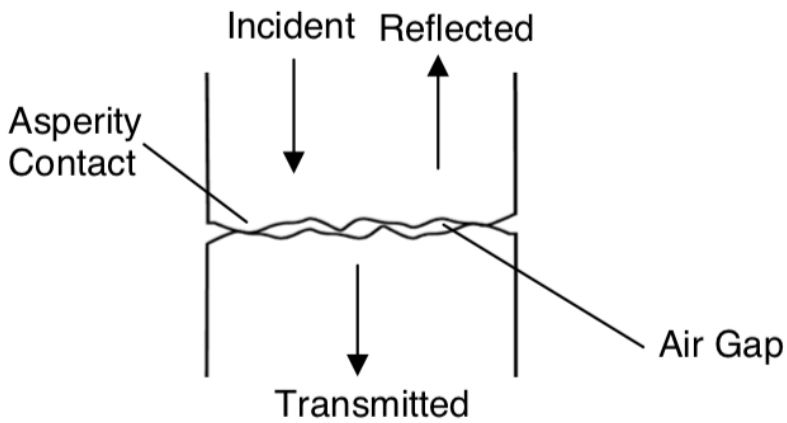

Aim:

To develop a transient roughness friction model for the wheel/rail interface.

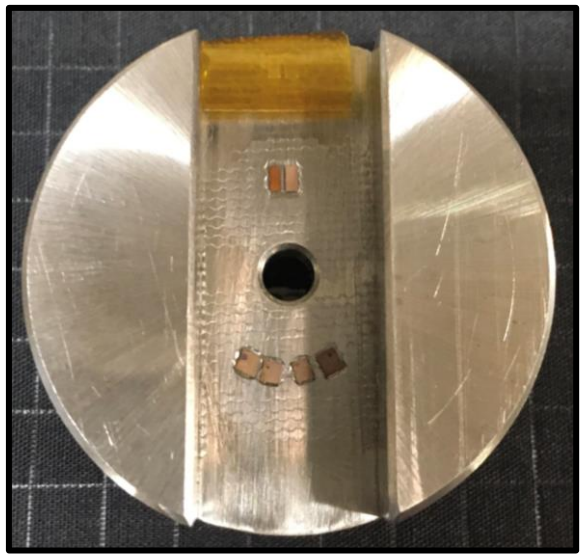

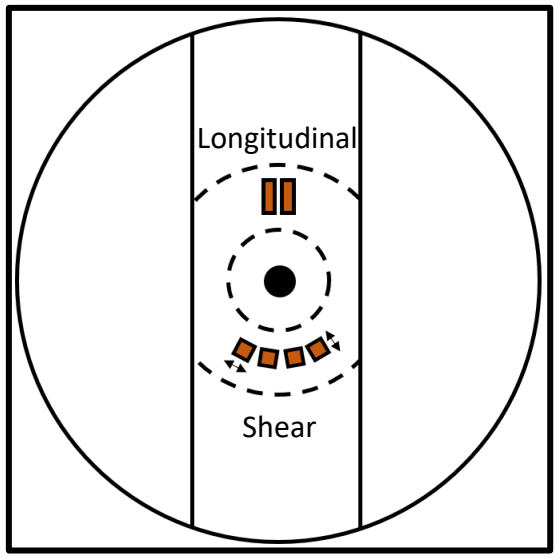

Ultrasonic Reflectometry:

By measuring the amount of reflected ultrasound signal we can measure the stiffness at the interface. This stiffness depends on the roughness at the interface.

Instrumentation:

Bonding ultrasonic sensors to wheel specimens to obtain real-time stiffness data during testing.

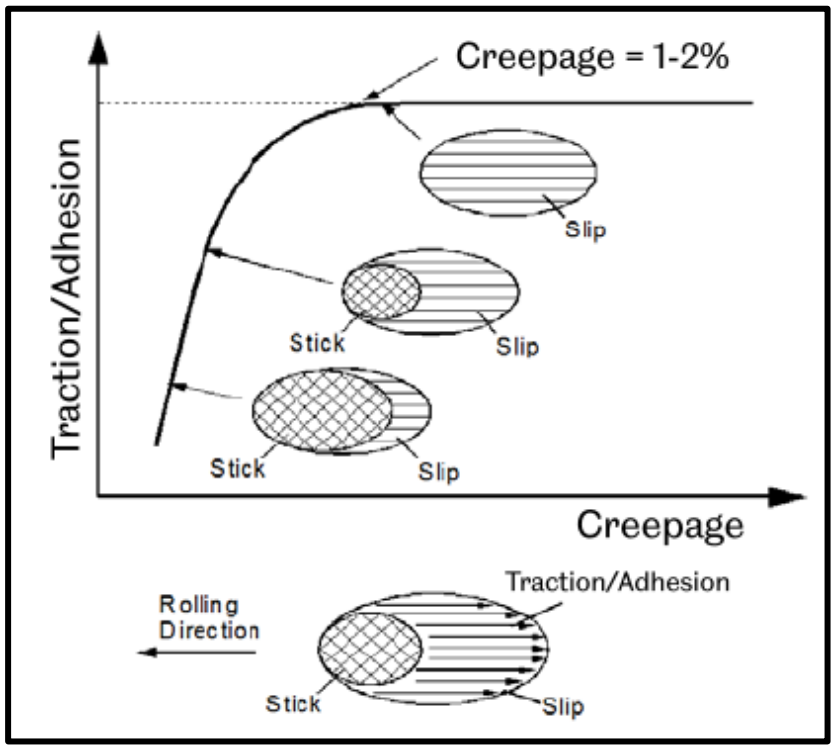

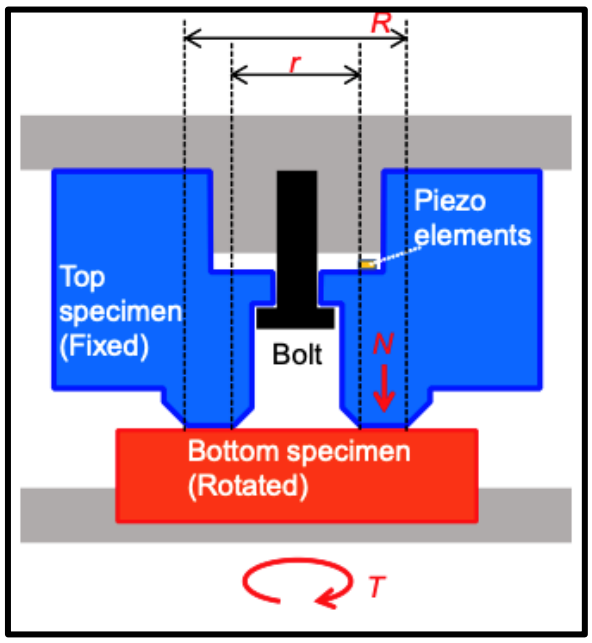

HPT Testing:

The next stage of the project will be the HPT testing whereby two samples are pressed together and then rotated to produce slip at the interface and study the effects of adhesion with varying roughness.

Creep-Curves:

A Creep-curve is a typical output from a friction model. It tells us the level of adhesion at the wheel/interface. A creep-curve can be obtained from a single High-Pressure-Torsion (HPT) test.

Industry Applications:

Rail roughness evolves over time from freshly ground rail to well worn in rail. Current models do not take into account this changing roughness. Such a model could produce a rail adhesion forecast allowing us to preempt maintenance procedures and extend a systems lifetime.

PhD Student: Harry Shackleton
Supervisor: Prof. Roger Lewis

Contact:
hshackleton1@sheffield.ac.uk